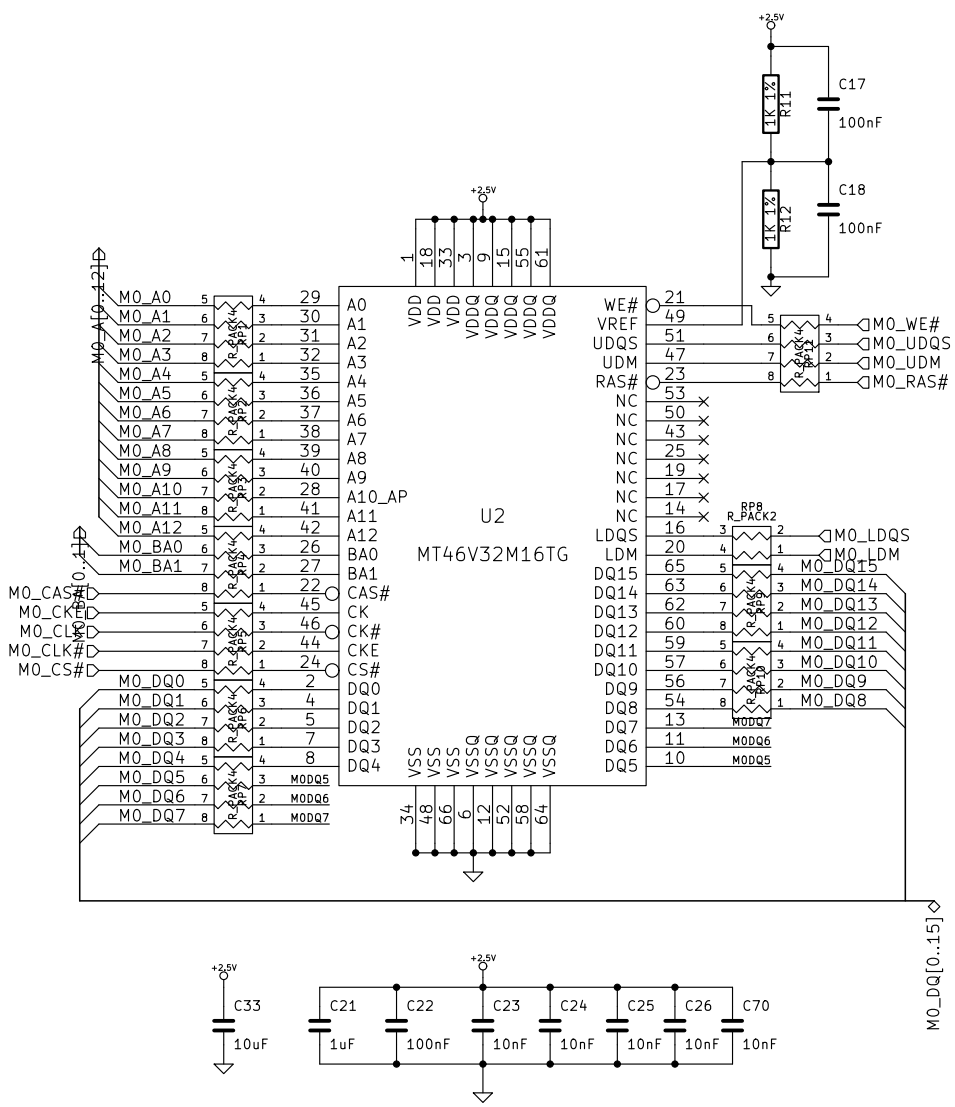
U2
MT46V32M16TG
M0_A[0..12]
M0_BA[0..1]
M0_DQ[0..15]
M0_A0
M0_A1
M0_A2
M0_A3
M0_A4
M0_A5
M0_A6
M0_A7
M0_A8
M0_A9
M0_A10
M0_A11
M0_A12
M0_BA0
M0_BA1
M0_CAS#
M0_CKE
M0_CLK
M0_CLK#
M0_CS#
M0_DQ0
M0_DQ1
M0_DQ2
M0_DQ3
M0_DQ4
M0_DQ5
M0_DQ6
M0_DQ7
M0_WE#
M0_UDQS
M0_UDM
M0_RAS#
M0_LDQS
M0_LDM
M0_DQ15
M0_DQ14
M0_DQ13
M0_DQ12
M0_DQ11
M0_DQ10
M0_DQ9
M0_DQ8
+2.5V
C17
100nF
C18
100nF
R11
R12
1K 1%
RP8
R_PACK2
C33
10uF
C21
1uF
C22
100nF
C23
10nF
C24
10nF
C25
10nF
C26
10nF
C70
10nF

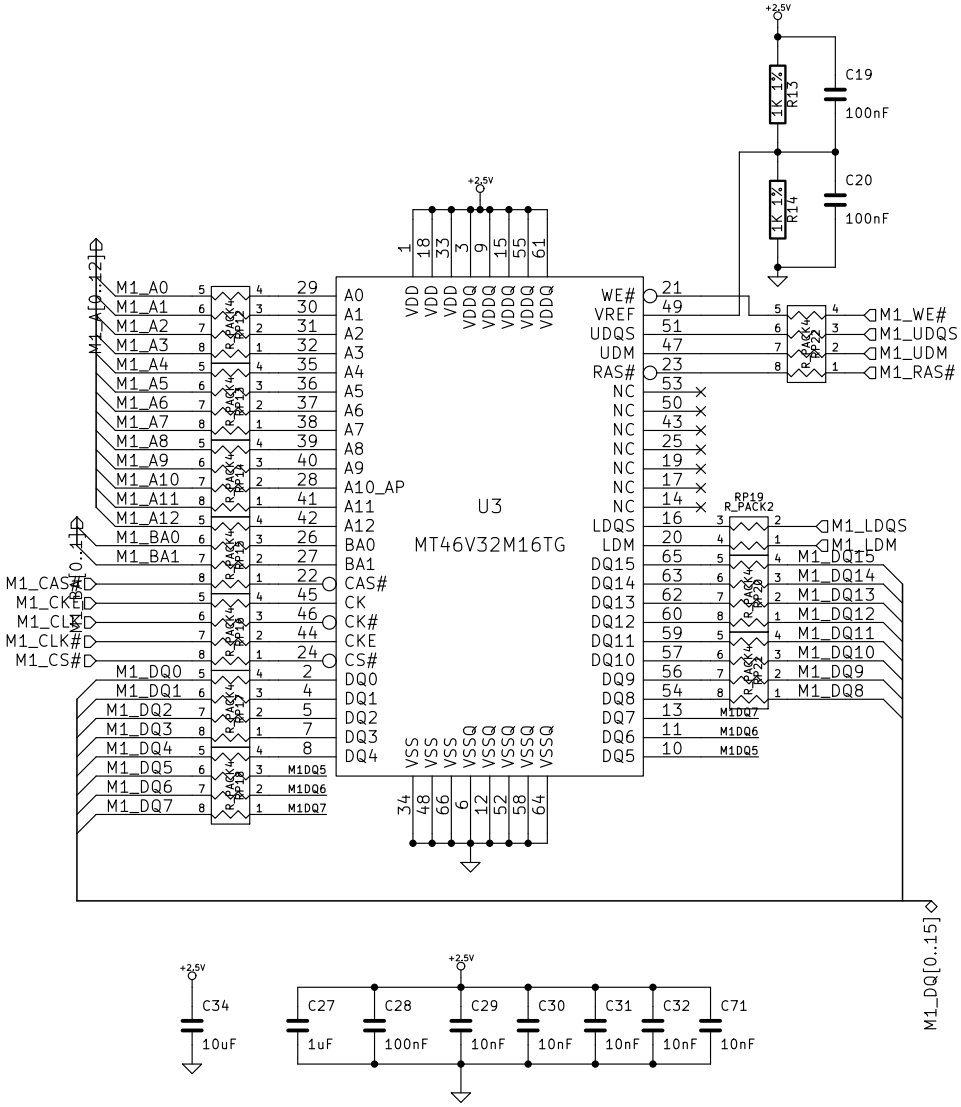
U3
MT46V32M16TG
M1_A[0..12]
M1_BA[0..1]
M1_DQ[0..15]
M1_A0
M1_A1
M1_A2
M1_A3
M1_A4
M1_A5
M1_A6
M1_A7
M1_A8
M1_A9
M1_A10
M1_A11
M1_A12
M1_BA0
M1_BA1
M1_CAS#
M1_CKE
M1_CLK
M1_CLK#
M1_CS#
M1_DQ0
M1_DQ1
M1_DQ2
M1_DQ3
M1_DQ4
M1_DQ5
M1_DQ6
M1_DQ7
M1_WE#
M1_UDQS
M1_UDM
M1_RAS#
M1_LDQS
M1_LDM
M1_DQ15
M1_DQ14
M1_DQ13
M1_DQ12
M1_DQ11
M1_DQ10
M1_DQ9
M1_DQ8
+2.5V
C19
100nF
C20
100nF
R13
R14
1K 1%
RP19
R_PACK2
C34
10uF
C27
1uF
C28
100nF
C29
10nF
C30
10nF
C31
10nF
C32
10nF
C71
10nF

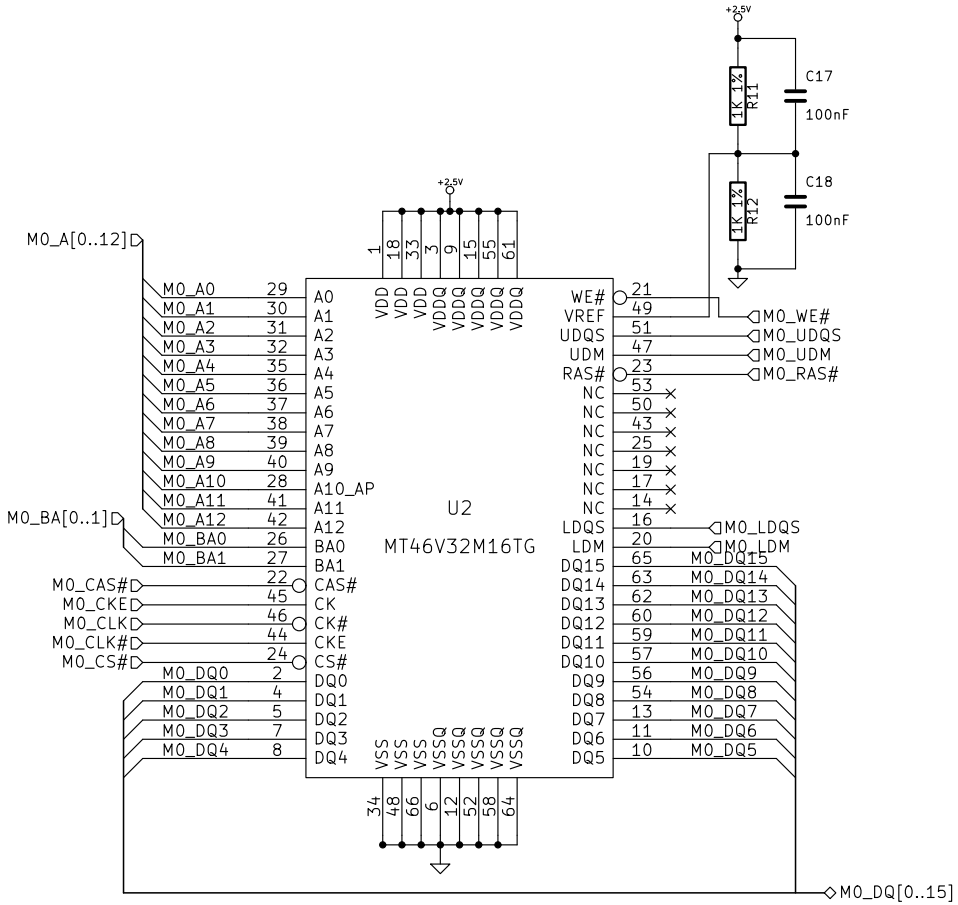
U2
MT46V32M16TG
M0_A[0..12]
M0_BA[0..1]
M0_CAS#
M0_CKE
M0_CLK
M0_CLK#
M0_CS#
M0_DQ[0..15]
M0_WE#
M0_UDQS
M0_UDM
M0_RAS#
M0_LDQS
M0_LDM
R11 1K 1%
R12 1K 1%
C17 100nF
C18 100nF
+2.5V

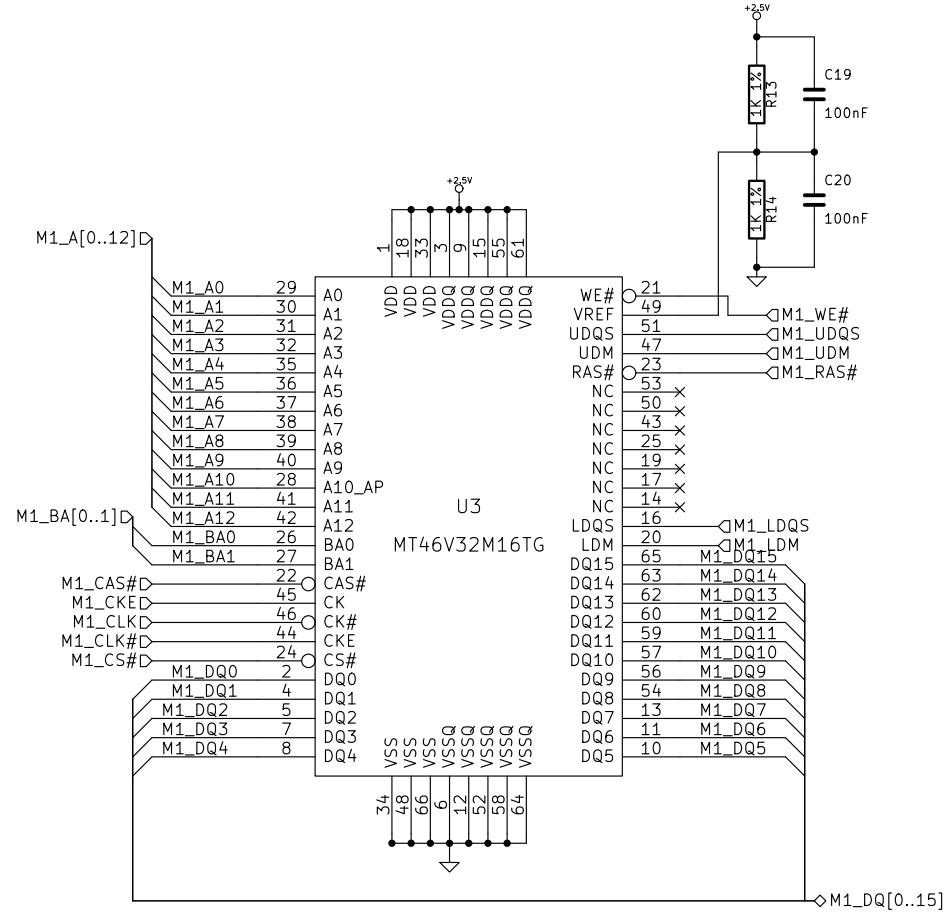
U3
MT46V32M16TG
M1_A[0..12]
M1_BA[0..1]
M1_CAS#
M1_CKE
M1_CLK
M1_CLK#
M1_CS#
M1_DQ[0..15]
M1_WE#
M1_UDQS
M1_UDM
M1_RAS#
M1_LDQS
M1_LDM
R13 1K 1%
R14 1K 1%
C19 100nF
C20 100nF
+2.5V

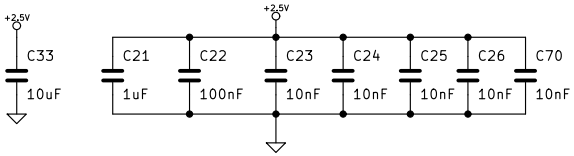
+2.5V
C33 10uF
C21 1uF
C22 100nF
C23 10nF
C24 10nF
C25 10nF
C26 10nF
C70 10nF

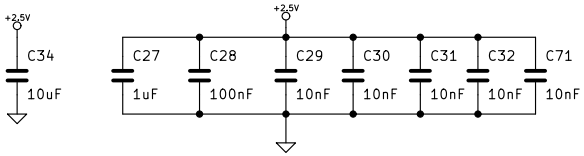
+2.5V
C34 10uF
C27 1uF
C28 100nF
C29 10nF
C30 10nF
C31 10nF
C32 10nF
C71 10nF